OPERATOR'S MANUAL

AVALON 61

CUT-SERIES

JAVAC
Welding & Building Machines

IMPORTANT: **Read this Owner's Manual Completely** before attempting to use this equipment. Save this manual and keep it handy for quick reference. Pay particular attention to the safety instructions we have provided for your protection. Contact your distributor if you do not fully understand this manual.

2009-04

CONTENT

§1 SAFETY **1**

§2TECHNOLOGY PARAMETERS **3**

§2.1 PARAMETERS 3

§3 INSTALLATION **4**

3. 1 UNPACKING 4

3.2 INPUT POWER CONNECTIONS 4

3. 3 GAS CONNECTIONS 4

§4 OPERATION **5**

4.1 LAYOUT OF THE FRONT AND REAR PANEL(TAKE THE CUT 40 FOR EXAMPLE) 5

4.2 CUTTING PREPARATION 6

4.3CUTTING OPERATION 6

§5MAINTENANCE **7**

5.1 BASIC TROUBLESHOOTING GUIDE 7

5.2 ELECTRICAL PRINCIPLE DRAWING 9

§1 SAFETY

Important Safety Precautions

OPERATION AND MAINTENANCE OF PLASMA ARC EQUIPMENT CAN BE DANGEROUS AND HAZARDOUS TO YOUR HEALTH.

Plasma arc cutting produces intense electric and magnetic emissions that may interfere with the proper function of cardiac pacemakers, hearing aids, or other electronic health equipment. Persons who work near plasma arc cutting applications should consult their medical health professional and the manufacturer of the health equipment to determine whether a hazard exists.

To prevent possible injury, read, understand and follow all warnings, safety precautions and instructions before using the equipment.

GASES AND FUMES

Gases and fumes produced during the plasma cutting process can be dangerous and hazardous to your health.

- Keep all fumes and gases from the breathing area. Keep your head out of the cutting fume plume.
- Use an air-supplied respirator if ventilation is not adequate to remove all fumes and gases.
- The kinds of fumes and gases from the plasma arc depend on the kind of metal being used, coatings on the metal, and the different processes. You must be very careful when cutting or cutting any metals which may contain one or more of the following:

Antimony	Chromium	Mercury	Beryllium
Arsenic	Cobalt	Nickel	Lead
Barium	Copper	Selenium	Silver
Cadmium	Manganese	Vanadium	

Always read the Material Safety Data Sheets (MSDS) that should be supplied with the material you are using. These MSDSs will give you the information regarding the kind and amount of fumes and gases that may be dangerous to your health.

- Use special equipment, such as water or down draft cutting tables, to capture fumes and gases.
- Do not use the plasma torch in an area where combustible or explosive gases or materials are located.
- Phosgene, a toxic gas, is generated from the vapors of chlorinated solvents and cleansers. Remove all sources of these vapors.

ELECTRIC SHOCK

Electric Shock can injure or kill. The plasma arc process uses and produces high voltage electrical energy. This electric energy can cause severe or fatal shock to the operator or others in the workplace.

- Never touch any parts that are electrically “live” or “hot.”
- Wear dry gloves and clothing. Insulate yourself from the work piece or other parts of the cutting circuit.

- Repair or replace all worn or damaged parts.
- Extra care must be taken when the workplace is moist or damp.
- Disconnect power source before performing any service or repairs.
- Read and follow all the instructions in the Operating Manual.

FIRE AND EXPLOSION

Fire and explosion can be caused by hot slag, sparks, or the plasma arc.

- Be sure there is no combustible or flammable material in the workplace. Any material that cannot be removed must be protected.
- Ventilate all flammable or explosive vapors from the workplace.
- Do not cut or weld on containers that may have held combustibles.
- Provide a fire watch when working in an area where fire hazards may exist.
- Hydrogen gas may be formed and trapped under aluminum workpieces when they are cut underwater or while using a water table. DO NOT cut aluminum alloys underwater or on a water table unless the hydrogen gas can be eliminated or dissipated. Trapped hydrogen gas that is ignited will cause an explosion.

NOISE

Noise can cause permanent hearing loss. Plasma arc processes can cause noise levels to exceed safe limits. You must protect your ears from loud noise to prevent permanent loss of hearing.

- To protect your hearing from loud noise, wear protective ear plugs and/or ear muffs. Protect others in the workplace.

Noise levels should be measured to be sure the decibels (sound) do not exceed safe levels.

PLASMA ARC RAYS

Plasma Arc Rays can injure your eyes and burn your skin. The plasma arc process produces very bright ultra violet and infra red light. These arc rays will damage your eyes and burn your skin if you are not properly protected.

- To protect your eyes, always wear a cutting helmet or shield. Also always wear safety glasses with side shields, goggles or other protective eye wear.
- Wear cutting gloves and suitable clothing to protect your skin from the arc rays and sparks.
- Keep helmet and safety glasses in good condition. Replace lenses when cracked, chipped or dirty.
- Protect others in the work area from the arc rays. Use protective booths, screens or shields.

§2Technology Parameters

§2.1 Parameters

Models / Parameters		CUT 40	CUT 35	CUT 41
Input power		220~240V,50/60Hz		
Rated input current（A）		30.5	27.3	30.5
Rated input power（KW）		4.2		
Cutting current adjustment range A）		20-40	15-35	20-40
Max no-load voltage (V)		480	475	480
Duty cycle（40℃，10 minutes）%		25	30	30
Carbon steel	Max Cutting thickness (mm)	25		
	Optimal cutting thickness (mm)	≤20		
Dimensions(mm)		500*130*300		
Protection class		IP23S		
Insulation class		F		
Net weight (kg)		10.3		

Note: The above parameters are subject to change with the improvement of machines.

§3 Installation

3. 1 Unpacking

1. Use the packing lists to identify and account for each item.
2. Inspect each item for possible shipping damage. If damage is evident, contact your distributor and / or shipping company before proceeding with the installation.

3.2 Input Power Connections

1.Check your power source for correct voltage before plugging in or connecting the unit

2. Power Cord and Plug This power supply includes an input power cord and plug suitable for 220~240V AC Single - Phase input power.

3. 3 Gas Connections

A. Connecting Gas Supply to Unit

1.Connect the gas line to the inlet port of the gas filter on the rear panel.

B. Check Air Quality

To test the quality of air, put the RUN / SET switch in the SET (down) position, check if there are Any oil or moisture in the air .

§4 Operation

4.1 Layout Of The Front And Rear Panel(Take the CUT 40 for example)

1. **power pilot lamp**
2. **over-current ,over-heat alarm** when over-heat, over-current, the lamp would be on.
3. **cutting gun improper installation and air pressure low alarm**

   (1)when short circuit occurred between the electrode and the nozzle for abnormal reasons, the lamp on , air feeds intermittently.

   (2)when cutting gun with no electrode and nozzle installed, the lamp on, air feeds intermittently .

   (3)when the Shield Cup is not installed, the lamp flashes.

   (4)when the air low, the lamp on
4. **voltage pilot lamp** turn on the switch of the cutting gun, generate the voltage, the lamp on
5. **cutting current regulator** it is used to regulate the current when cutting.
6. **operation or gas test selection** when cutting the workpiece, turn to the operation; when doing gas test, turn to the gas test.
7. **cutting gun connector** connected to the cutting machine

8. **positive output cable** connected to the workpiece
9. **air filter** ensure there are no impurity and moisture in the compressed air
10. **air pressure regulator** it is used to regulate the air pressure of the compressed air
11. **power switch** turn on or off the power source
12. **power cable** connected to the appreciate power supply

4.2 Cutting Preparation

1、Tightly connect the power cable to electrical socket outlet (the input voltage, refer to the section 2 technology parameters)

2、connect the air pipe to the air supply equipment, the earth cable to the workpiece

3、turn on the power switch ,the power source lamp on.

4、turn the RUN/SET switch to SET position, the air flow, then regulate the air pressure to 3.5-6bar

5、turn the RUN/SET switch to RUN position, regulate the current after the flow stops.

6、now all the preparation done .

4.3Cutting Operation

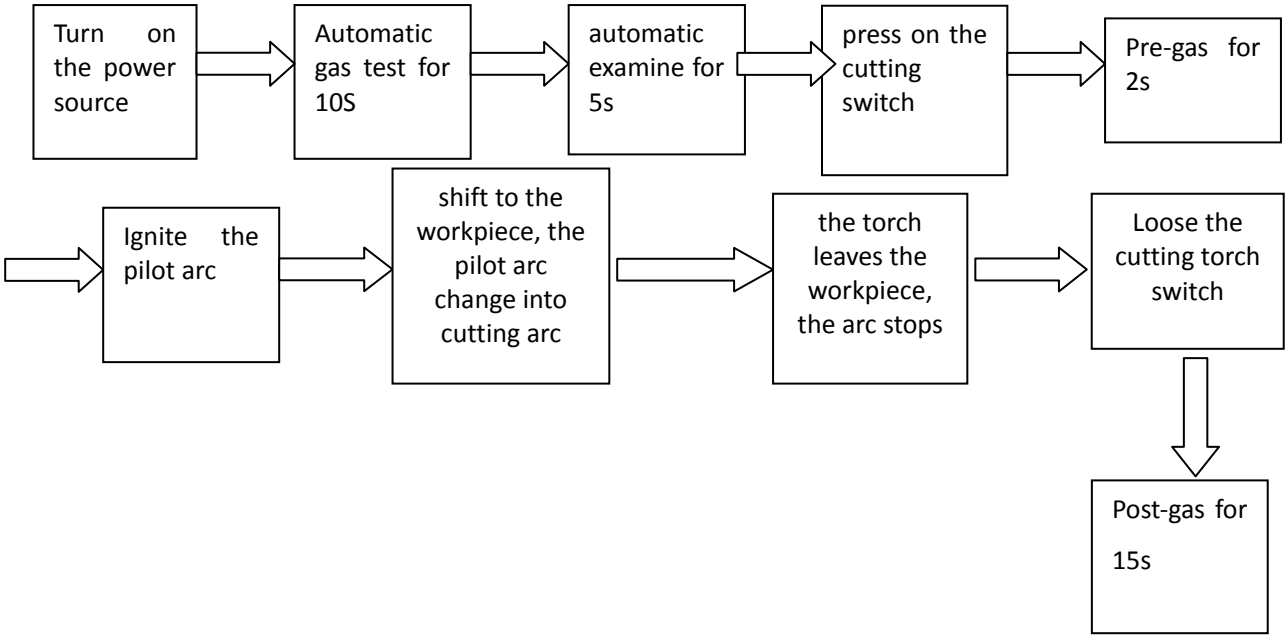

Note：(1) The alarm lamp on when cutting, it is needed to loose the switch of the torch until the alarm release, then press on the switch to start cutting again.

(2) In the automatic gas test and examine, press on the cutting torch, there will no reflection.

（3）After a long usage, the surface of the electrode and nozzle will have Oxidation reaction. Please replace the electrode and nozzle, For The alarm lamp will on when install the shield cup, and stop working,

§5Maintenance

5.1 Basic Troubleshooting Guide

WARNING

There are extremely dangerous voltage and power levels present inside this unit. Do not attempt to diagnose or repair unless you have had training in power electronics measurement and troubleshooting techniques.

A. The cutting torch fail to ignite the arc, when press on the torch switch, the TIP/GUN/GAS light on.

1.Gas pressure too low, adjust gas pressure to 65psi/4.5bar.

B. The cutting torch fail to ignite the arc ,when press on the torch switch, the TIP/GUN/GAS lamp splash,

1.The shield cup improper installation, turn off the power source, install and screw it down properly, then turn on the power source.

C. The cutting torch fail to ignite the arc, when press on the torch switch, the TIP/GUN/GAS lamp on. air feed intermittently.

1.The electrode or nozzle improper installation, turn off the power source, install the electrode or nozzle, and screw shield cup down properly, then turn on the power source.

D .The cutting torch fail to ignite the arc, when press on the torch switch, the TIP/GUN/GAS lamp on. air feed intermittently.

1. Short-circuit for burned-out and other abnormal situation, turn off the power source, change the electrode and nozzle.

E. Power lamp and temperature lamp on.

1. Air flow blocked, check for blocked air flow around the unit and correct condition.
2. Fan blocked, check and correct condition.
3. Unit is overheated, let unit cool down for at least 5 minutes. Make sure the unit has not been operated beyond Duty Cycle limit, refer to technology parameters in Section 2.
4. Input voltage over the normal range, choose the proper voltage , refer to technology parameters in the Section 2.
5. Faulty components in unit, return for repair or have qualified technician repair per Service Manual.

F. Torch fail to ignite the arc when torch switch is activated

1. System is in SET mode，change to RUN mode.

2. Faulty torch parts, inspect torch parts and replace if necessary.

3. 3. Gas pressure too high or too low, adjust to proper pressure.

4. Faulty components in unit, return for repair or have qualified technician repair per Service Manual.

G. No cutting output; Torch activated, power source on ; Gas flows; Fan operates

1. Torch not properly connected to power supply, check that torch leads are properly connected to power supply.

2. Work cable not connected to work piece, or connection is poor, make sure that work cable has a proper connection to a clean, dry area of the workpiece.

3. Faulty components in unit, return for repair or have qualified technician repair per Service Manual.

4. Faulty Torch, return for repair or have qualified technician repair.

H. Low cutting output

1. Incorrect setting of CURRENT (A) control, check and adjust to proper setting.

2. Faulty components in unit, return for repair or have qualified technician repair.

I. Difficult Starting

1. Worn torch parts (consumables), shut off input power. Remove and inspect torch shield cup, tip, starter cartridge, and electrode. Replace electrode or tip if worn; replace starter cartridge if end piece does not move freely; replace shield cup if excessive spatter adheres to it.

J. Arc shuts off during operation; arc will not restart when torch switch is activated.

1. Power Supply is overheated (OC/OT lamp on), let unit cool down for at least 5 minutes. Make sure the unit has not been operated beyond Duty Cycle limit. Refer to Section 2 for duty cycle specifications.

2. Gas pressure too low (the TIP/GUN/GAS lamp on when press on torch switch is on), check source for at least 65 psi / 4.5 bar; adjust as needed.

3 Torch consumables worn, check torch shield cup, tip, starter element, and electrode; replace as needed.

4. Faulty components in unit:, return for repair or have qualified technician repair per Service Manual.

K. No gas flow; the power lamp on; Fan operates

1. Gas not connected or pressure too low, check gas connections. Adjust gas pressure to proper setting.

2. Faulty components in unit, return for repair or have qualified technician repair.

L. Torch cuts but low quality

1. Current (A) control set too low, increase current setting.

2. Torch is being moved too fast across workpiece, reduce cutting speed.

3. Excessive oil or moisture in torch, hold torch 1/8 inch (3 mm) from clean surface while purging and observe oil or moisture buildup (do not activate torch). If there are contaminants in the gas, additional filtering may be needed.
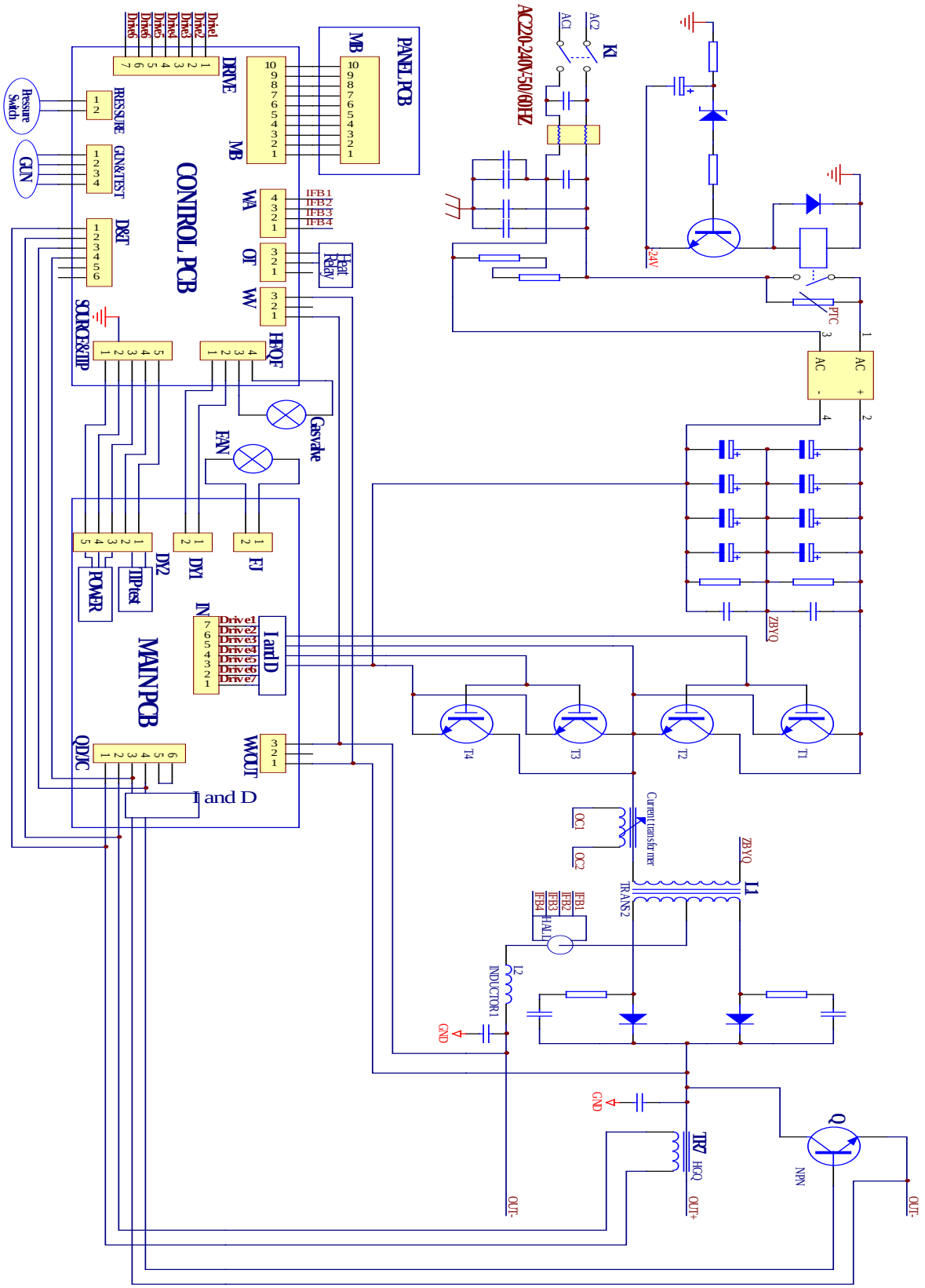
5.2 Electrical principle drawing